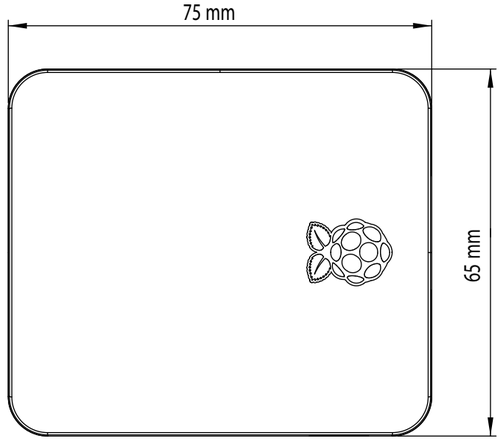
75 mm
65 mm

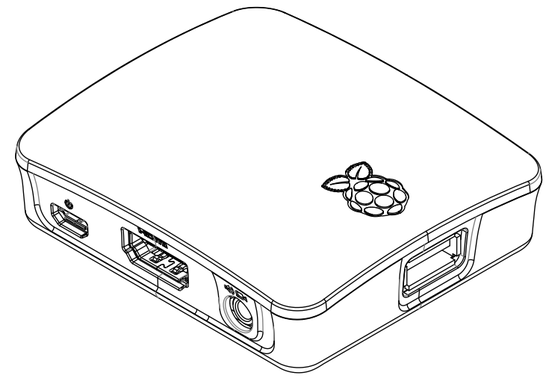

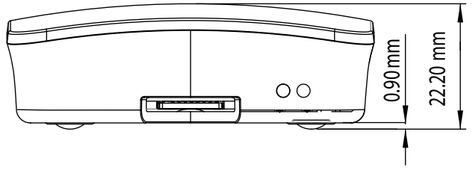
0.90mm
22.20 mm

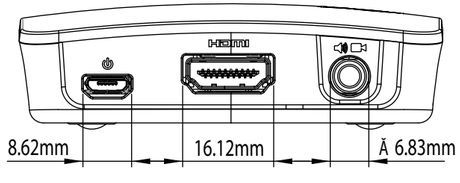
8.62mm
16.12mm
Ă 6.83mm

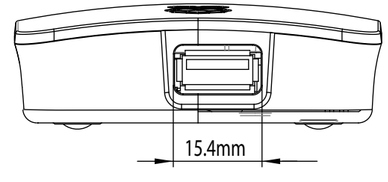
15.4mm

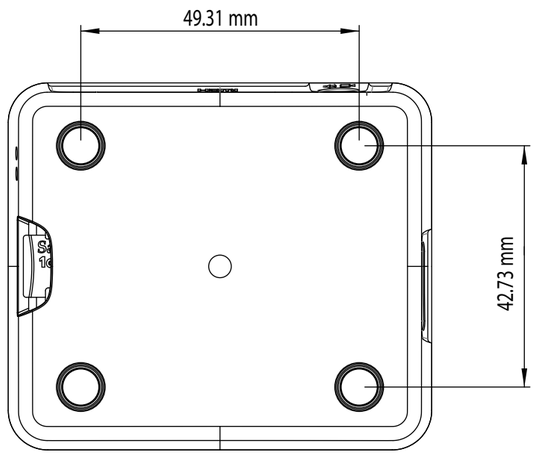
49.31 mm
42.73 mm